GERMAN ARMY TRUCK "OPEL BLITZ"

PAPER MODEL FROM THE «PAPER ARMY»

HISTORICAL REFERENCE

"Opel Blitz" is a famous army truck, which was widely used by the Wehrmacht troops on all fronts of the Second World War, as it fully corresponded to the Blitzkrieg idea. The production of trucks began in 1937 and continued until 1944. The truck proved to be a good and reliable transport, it was unpretentious in the deserts of Africa and in Russia. "Opel" was used to transport soldiers, military cargo, transportation of artillery cannons, ammunition, this truck was needed by all types of troops, from infantry to tank divisions. In addition to the usual layout with a body, "Opel Blitz" played the role of a communications vehicle, a repair vehicle, a base for an anti-aircraft

gun, a medical vehicle, a command post on wheels, and more. The truck served until the end of the War and was always a welcome trophy for the Allies.

PRINTING INSTRUCTIONS

To print a model of a tank, you need to select sheets of a document with a template, printing is carried out on A4 sheets (international format, 210 by 297 mm), if you have a different paper size, it's okay, you can print on it, the main thing in this case is do not stretch on the whole sheet (violation of the aspect ratio of the sheet), since this will change all the dimensions of the model, if, when printing on a different format, it turns out that there is an empty space on the sheet - let it remain, if the model is reduced in size, this is also not scary, there will be changes insignificant.

CUTTING AND GLUING INSTRUCTIONS

For all models, a separate video assembly instruction is provided, this video is available on my "Paper Army" YouTube channel at this link - ”How to make paper truck Opel Blitz WWII” (Rights reserved, commercial use is prohibited, deposit has been made).

FRIENDS

All models are free, but they are created with difficulty to support the author of the models and the "Paper Army" channel watch the video on this link to the end - "Video Review of the Opel blitz paper truck", this is a video with a review of the assembled the same model of the Opel Blitz You downloaded, with epic music, watching the video to the end, like and commenting will help the channel in promoting and other lovers of collecting paper models will see the video and also come to the channel - this is the best support, thanks;)

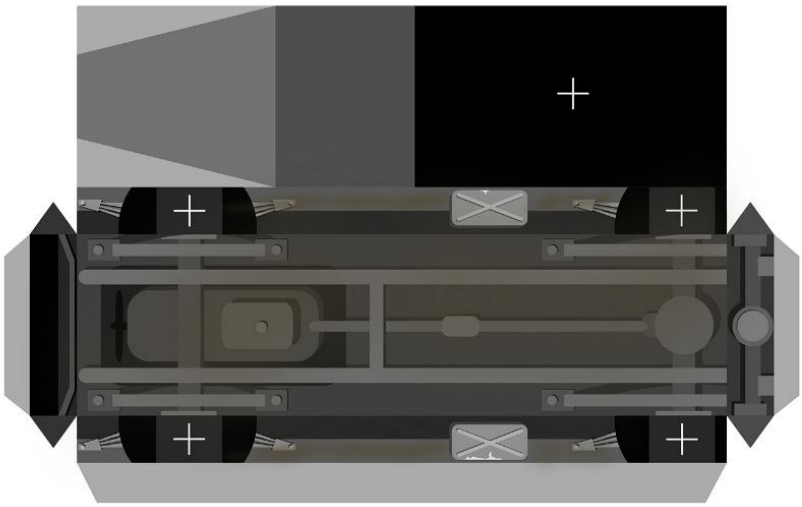

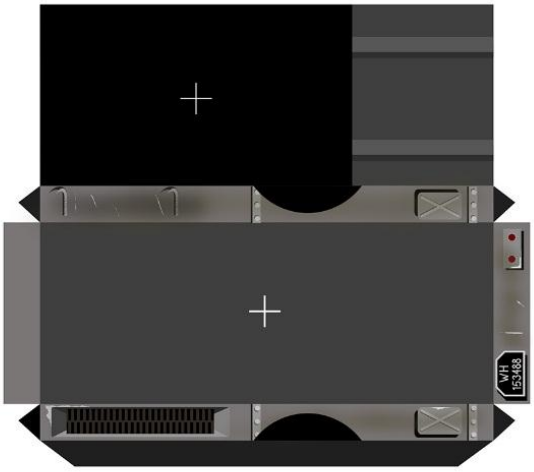

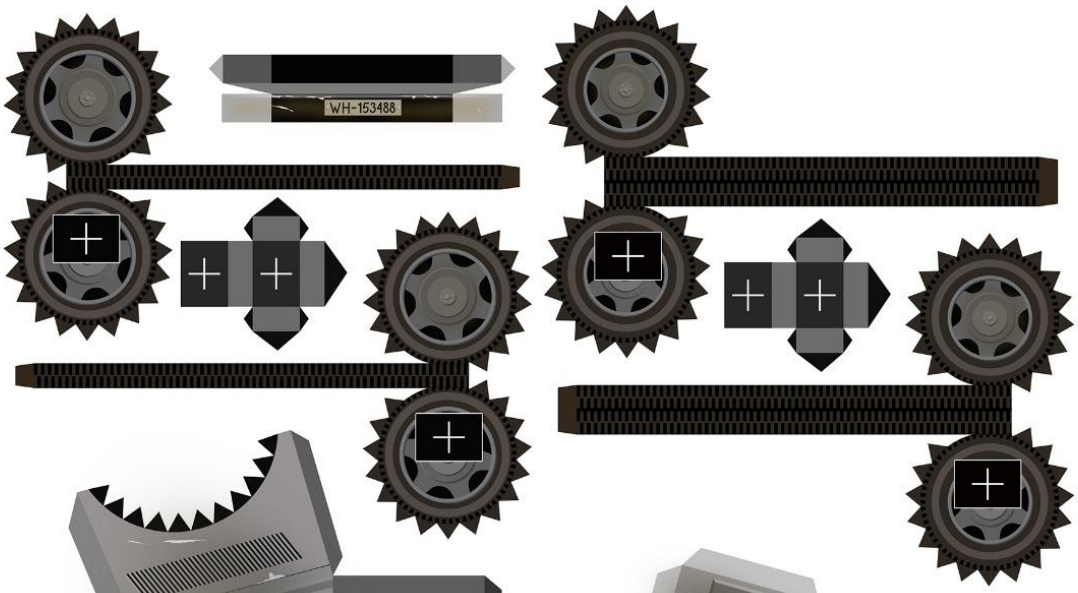

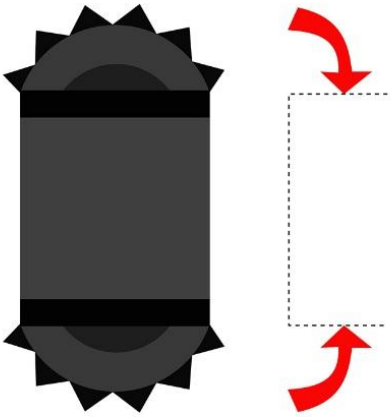

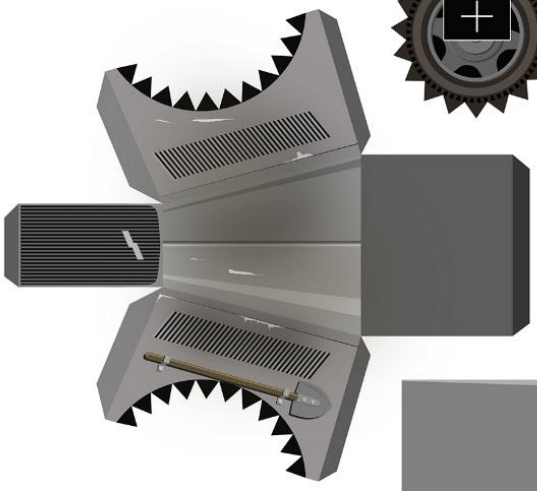

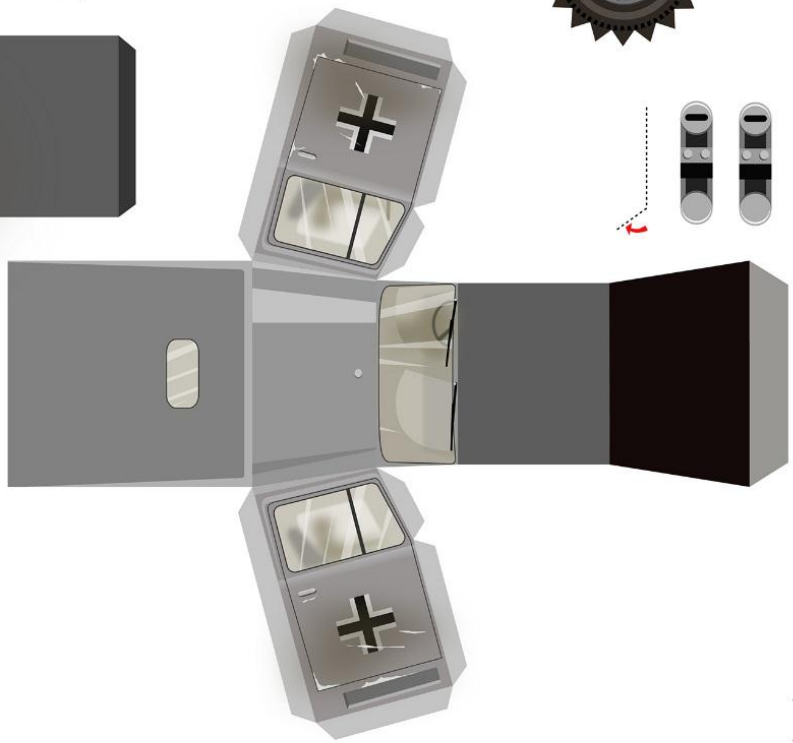

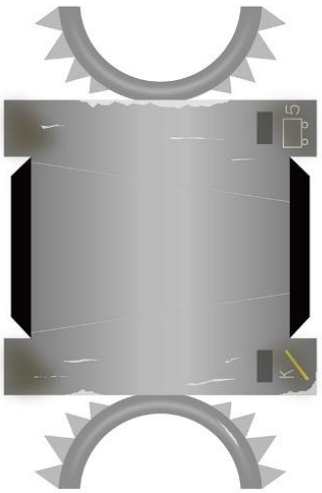

Instructions

PAPER ARMY©
All rights reserved!
For personal use only!
Commercial use only with permission!

PAPER ARMY©
All rights reserved!
For personal use only!
Commercial use only with permission!

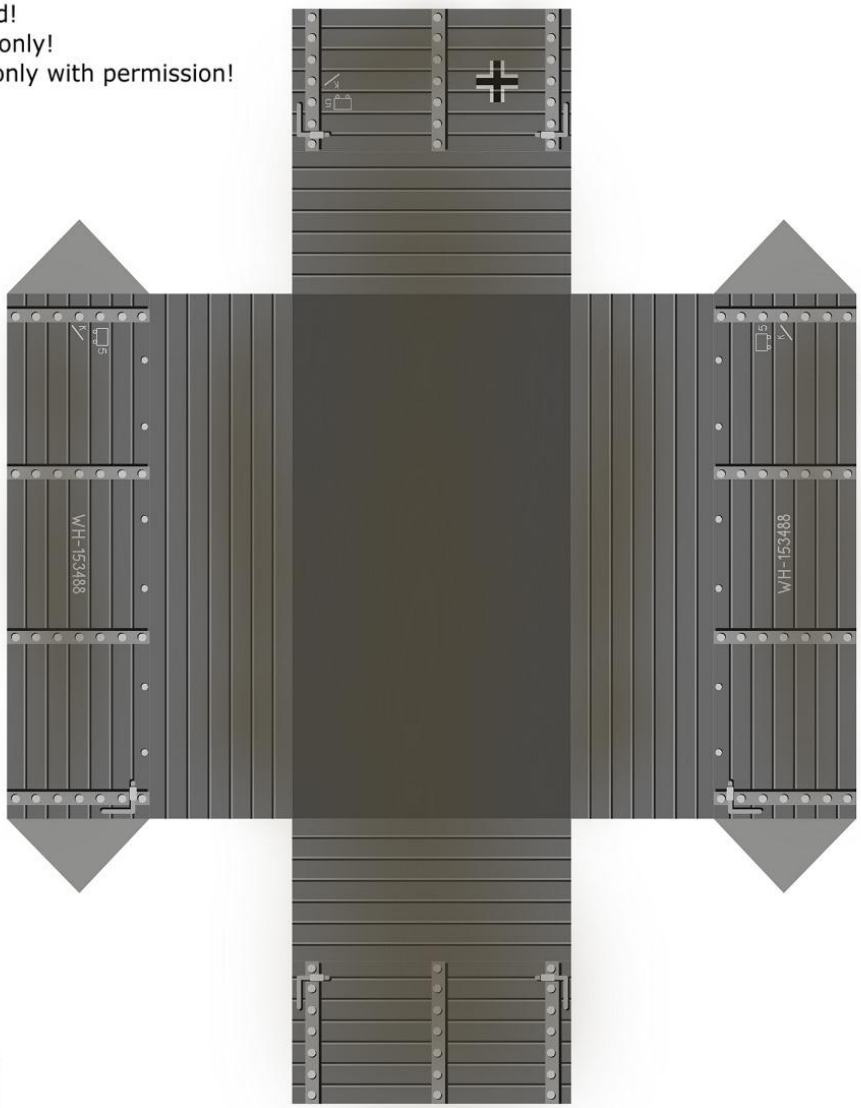

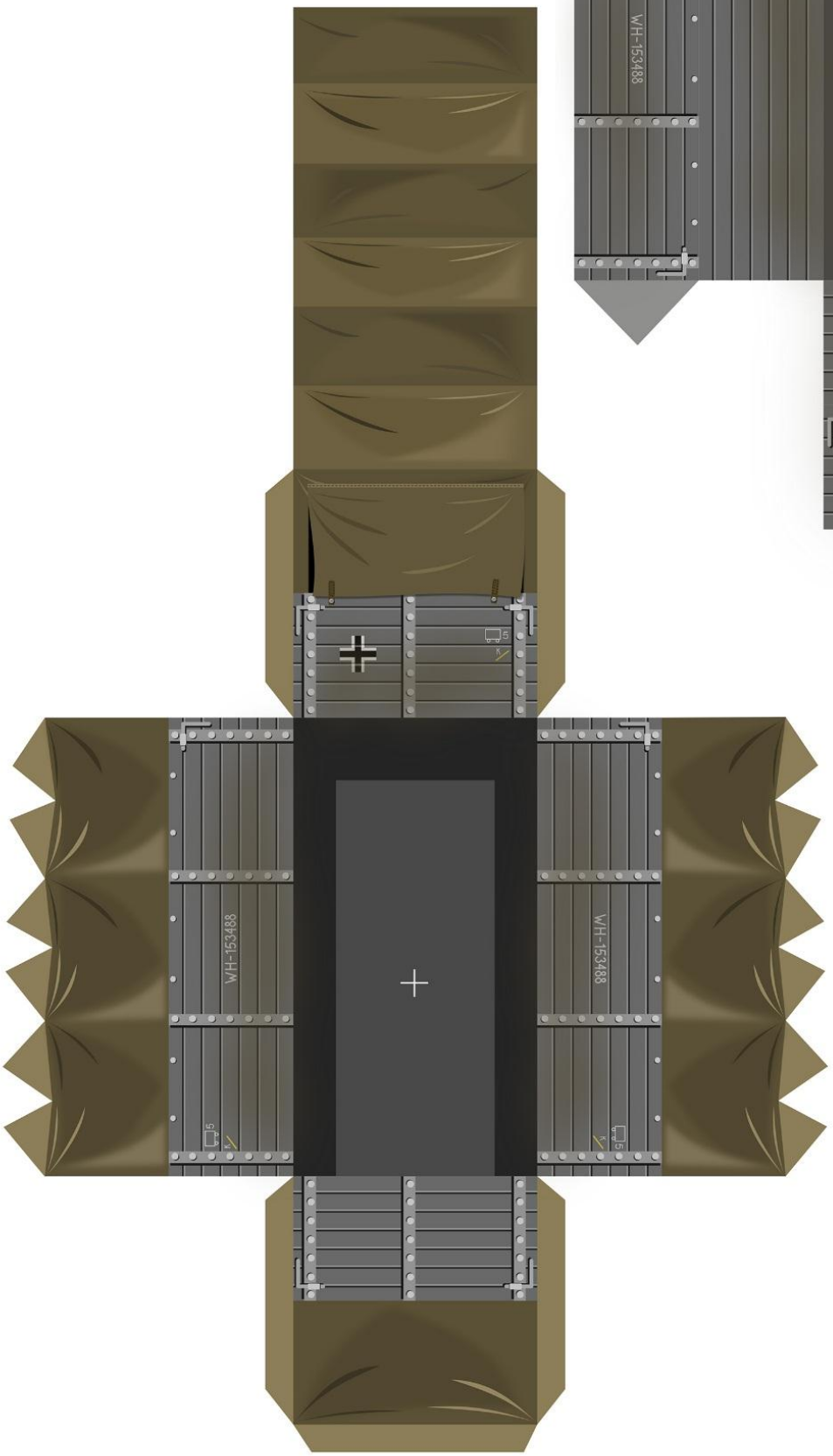

Instructions